ELECTRONICS AND INSTRUMENTATION ENGINEERING

NATIONAL INSTITUTE OF TECHNOLOGY, AGARTALA

DIGITAL ELECTRONICS LABORATORY (UEE14B02)

A LAB WORK REPORT SUBMITTED IN PARTIAL FULFILLMENT OF THE REQUIREMENTS FOR THE DEGREE OF

BACHELOR OF TECHNOLOGY

IN

ELECTRONICS AND INSTRUMENTATION ENGINEERING BY

Indrani Chakraborty-23UEI088 , Mrinmay Biswas-23UEI066

Aditya Kar-23UEI071 , Swaparup Mukherjee-23UEI207

Tanishq Rathode-23UEI020 , Ankit Kumar-23UEI213

Raj Anand-23UEI082

UNDER THE SUPERVISION OF **DR. YOGESH KUMAR SARIYA**

PROFESSOR, EIE DEPARTMENT, NIT AGARTALA

ACKNOWLEDGEMENT

We would like to express our special thanks of gratitude to **Dr. Yogesh Kumar Sariya** (Professor) who gave us the golden opportunity to do this wonderful report on the subject "**DIGITAL ELECTRONICS"** and for their continuous efforts to help us grasp this subject and also for generating interest in it. We would like also to thanks our dear friends for sharing their experience while doing the experiments which has helped us to master the experimental knowledge and also to confirm theoretical knowledge from the same.

Introduction

This project explores the concept and implementation of binary to Binary Coded Decimal (BCD) conversion. Binary, the native language of computers, uses a series of 0s and 1s to represent data. BCD, on the other hand, encodes each decimal digit (0-9) using a 4-bit binary pattern.

INDEX

1. BCD ADVANTAGE……PAGE NO.- 5-6

2. ALGORITHM USED……PAGE NO.- 5-6

3. CIRCUIT DESIGN……..PAGE NO.- 5-6

4. COMPONENTS USED…….PAGE NO.- 7

5. TRUTH TABLE…….PAGE NO.- 8

6. CIRCUIT DIAGRAM…….PAGE NO.- 9

7. CIRCUIT IMAGE……..PAGE NO.- 10-11

8. CONCLUSION……..PAGE NO.- 12

9. FUTURE ADVANCEMENTS……..PAGE NO.- 12

1. Why Use BCD?

While binary is efficient for internal computations, it can be cumbersome for human interaction. BCD offers advantages in specific scenarios:

DECIMAL PRECISION- BCD representation maintains decimal precision without the rounding errors that can occur in floating-point representations. This is crucial in applications such as financial calculations where accuracy is paramount.

HUMAN READABILITY-BCD is more human-readable than pure binary, particularly when it comes to displaying numeric data. Programming languages that support BCD operations can make it easier to work with data that is intended for human consumption.

2.ALGORITHM USED

DOUBLE DABBLE ALGORITHM-

The double dabble algorithm, also known as the shift-and-add-3 algorithm, is a method for converting binary numbers to Binary-Coded Decimal (BCD) format.

Steps:

1. **Shift and Initialize:**
   - Start with a 0 value in BCD format (typically represented by four 0s).
   - Shift the binary number left by one position.
2. **Examine and Add:**
   - Analyse each digit (4-bit group) in the current BCD value.
   - If any digit is 5 or greater (in binary), add 3 to that digit.
     - This "dabble" step ensures proper correction for carrying in BCD when the binary value gets doubled in the next step.
3. **Repeat:**
   - Shift the remaining binary bits left by one position again.
   - Go back to step 2 and examine each digit in the BCD value for correction if needed.
4. **Continue:**
   - Repeat steps 2 and 3 until all the bits in the binary number have been processed.

3.CIRCUIT DESIGN

The circuit design is very huge and complex as whole but its insides is very simple.We used various ICs to make a conditional adder which adds 3 to the output when the input value is more than 4.Then using such 7 conditional adders we made the whole circuit by connecting between them to the input and the output LED indicators.

4.COMPONENTS USED

S.NO	APPRATAUS	SPECIFICATIONS	QUANTITY
1.	XOR GATE	**IC7402**	**11**
2.	AND GATE	**IC7408**	**7**
3.	OR GATE	**IC7432**	**7**
4.	NOT GATE	**IC7404**	**4**
5.	BREADBOARD	**-**	**5**
6.	LED LIGHT	**RED**	**12**
7.	RESISTOR	**470 - 500 OHM**	**12**
8.	BATTERY	**9 V**	**1**
9.	CONNECTING WIRES	**-**	**AS REQUIRED**

5.TRUTH TABLE

in3	in2	in1	in0	out3	out2	out1	out0
0	0	0	0	0	0	0	0
0	0	0	1	0	0	0	1
0	0	1	0	0	0	1	0
0	0	1	1	0	0	1	1
0	1	0	0	0	1	0	0
0	1	0	1	1	0	0	0
0	1	1	0	1	0	0	1
0	1	1	1	1	0	1	0
1	0	0	0	1	0	1	1
1	0	0	1	1	1	0	0
1	0	1	0	x	x	x	x
1	0	1	1	x	x	x	x
1	1	0	0	x	x	x	x
1	1	0	1	x	x	x	x
1	1	1	0	x	x	x	x
1	1	1	1	x	x	x	x

This represents the input values and their respective output values of each conditional adder.

6.CIRCUIT DIAGRAM

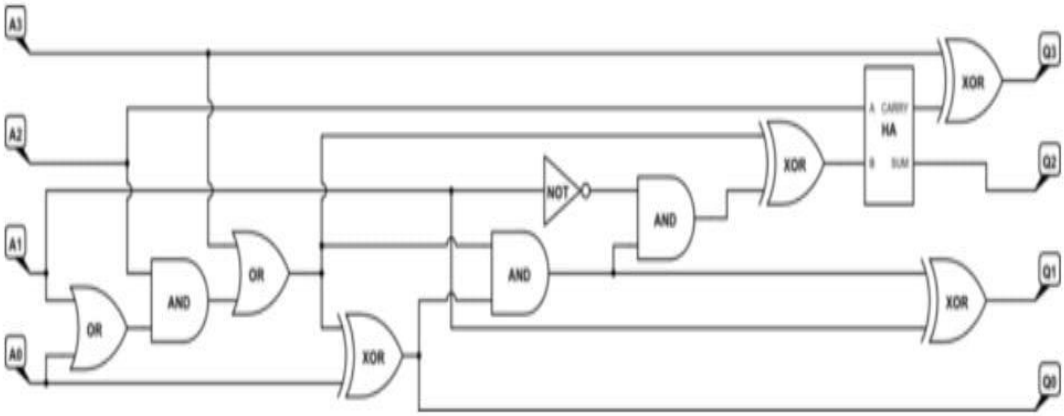

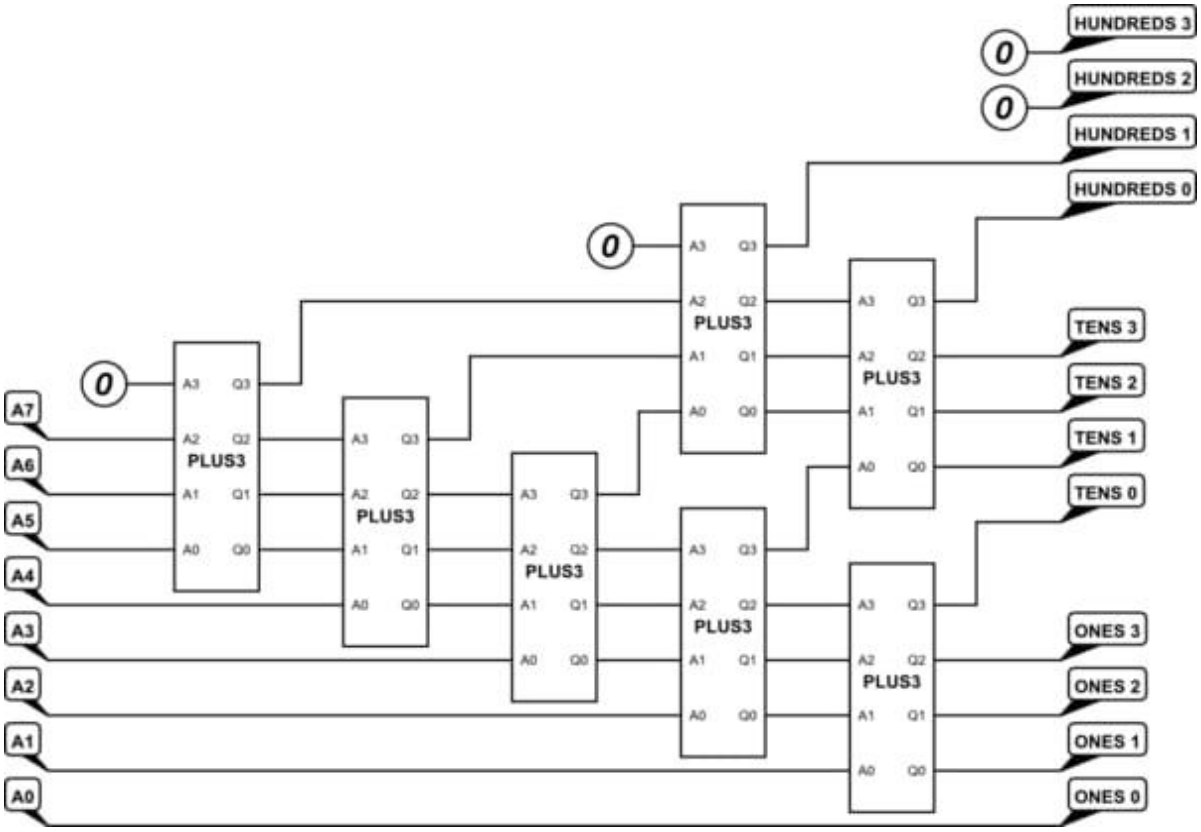

7.CIRCUIT IMAGE

SINGLE CONDITIONAL ADDER-

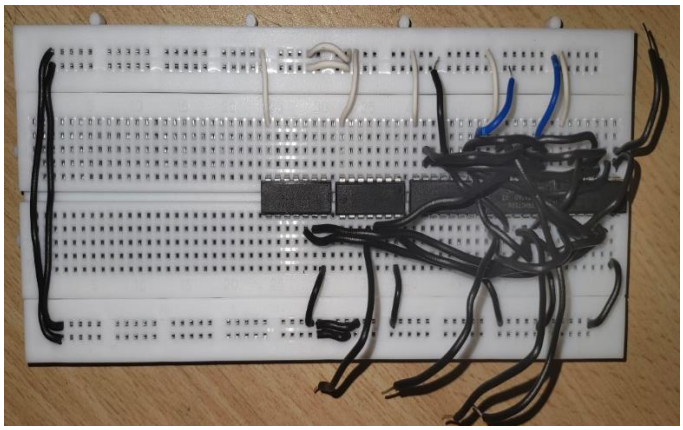

DOUBLE CONDITIONAL ADDER-

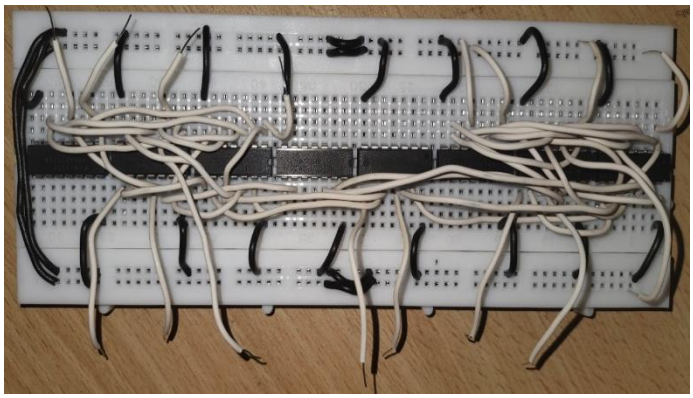

LED DETECTOR-

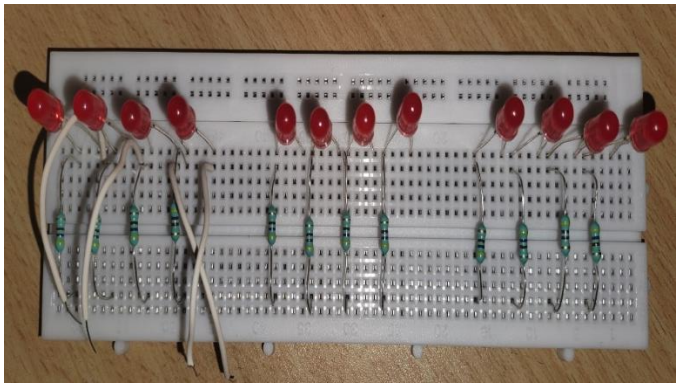

COMPLETE CIRCUIT-

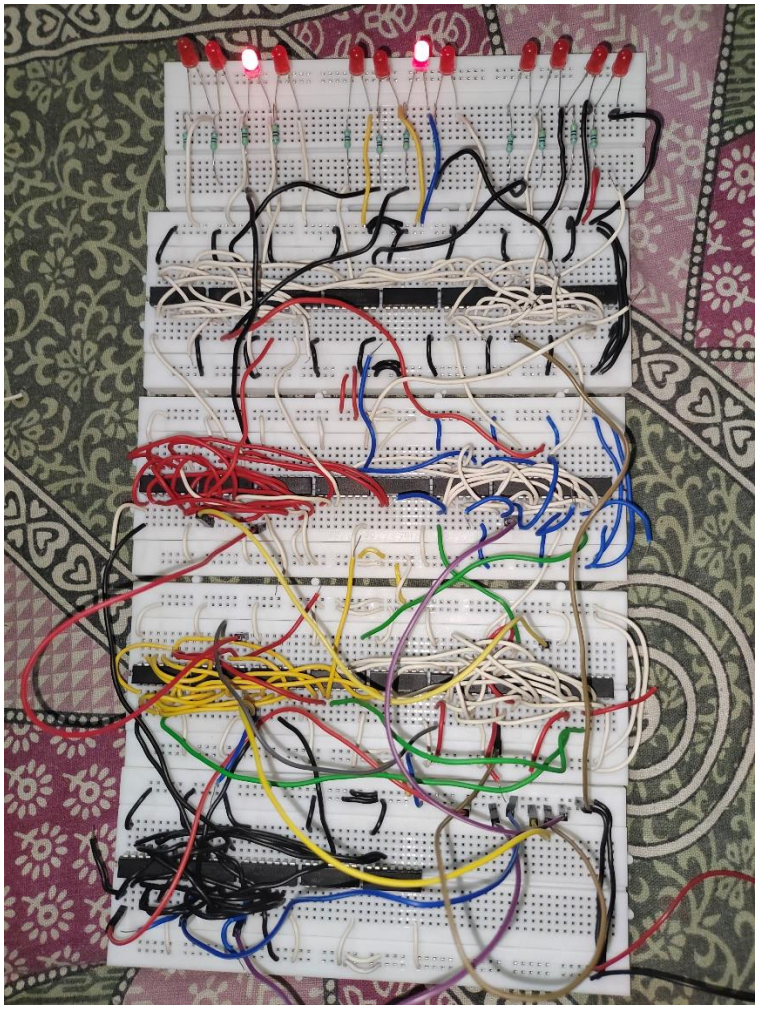

8.CONCLUSION

In conclusion, this project successfully designed and implemented an 8-bit binary to BCD converter. Binary-coded decimal (BCD) is a representation of decimal digits using binary bits. It offers advantages for interfacing with decimal displays and performing decimal arithmetic in embedded systems where processing binary data is prevalent.

9.FUTURE ENHANCEMENTS

In future the circuit can be further enhanced through following tweakings-

(i)By using switches for taking the input values of binary instead of just jumper wires.

(ii)By using led display instead of red led bulb light for BCD indication.

(iii)By using properly measured connecting wires for connection for more cleaner circuit look.